TABLE OF CONTENTS: DANDE MASTER ASSEMBLY

1. EXPLODED ASSEMBLY DRAWING
2. PHYSICAL ENVELOPE / COORDINATE SYSTEM
3. FIELD OF VIEW, KEEP OUT ZONES
4. INSTRUMENT ALIGNMENT REQUIREMENTS
5. SURFACE COATINGS CALLOUT
6. MGSE PHYSICAL ENVELOPE / PART CALLOUT
7. CRANE LIFTING POINTS
8. RED/GREEN TAG ITEMS (REMOVE BEFORE FLIGHT)

REVISIONS

REVISION	REVISION CHANGE	DATE	REA
SYS200.0	INITIAL RELEASE	08/03/2007	BRUCE DAVIS
SYS200.1	UPDATES FOR CDR	02/06/2008	ANDREW TOMCHEK
SYS200.2	UPDATE FOR PQR, ADDED: PHYSICAL ENVELOPE, FOV, SURFACE COATINGS, ALIGNMENTS, LIFT POINTS, REMOVE BEFORE FLIGHT ITEMS	07/25/2008	BRUCE DAVIS
SYS200.3	UPDATE FOR FCR, IMPROVED FIDELITY OF ALL SUBASSEMBLIES, CONNECTORS, FASTENERS, NMS INSTRUMENT, HCI MOUNTS, Y TORQUE ROD LOCATION	12/21/2008	BRUCE DAVIS

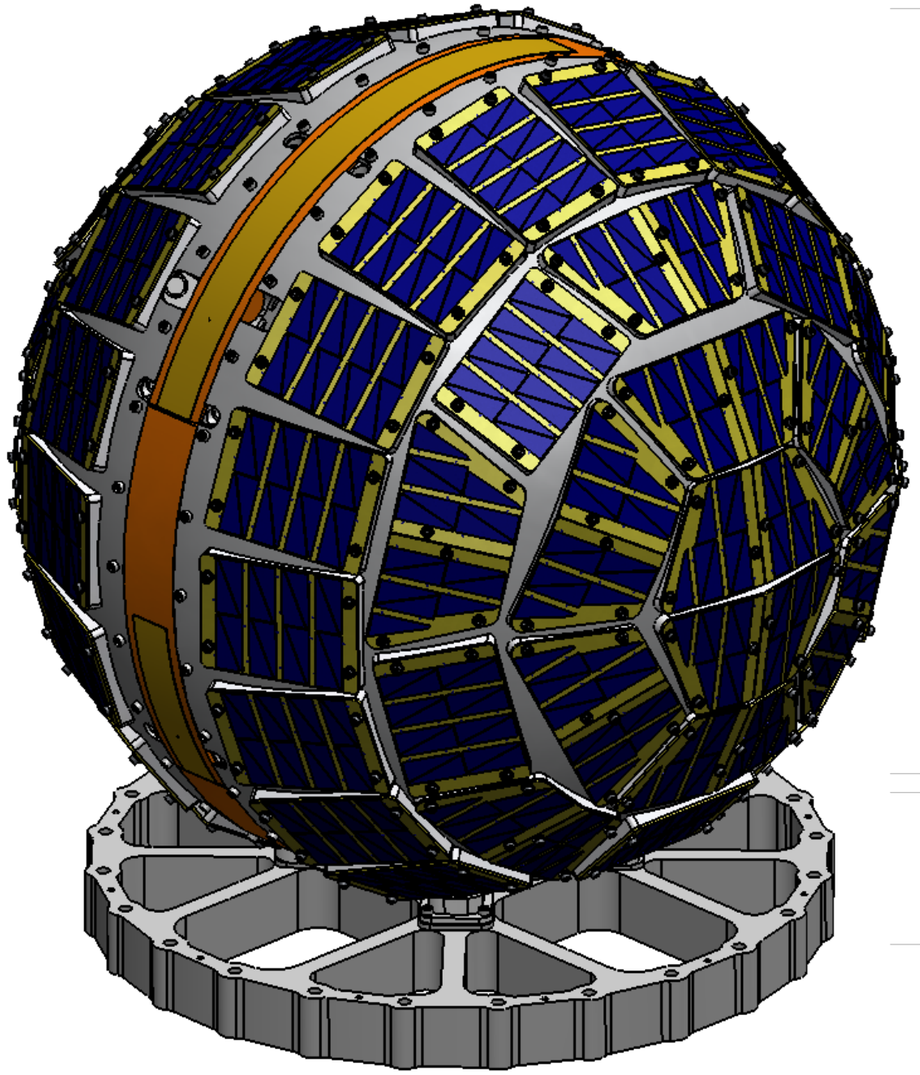

SPACE-SECTOR-SPHERE
(SCIENCE GATHERING COMPONENT)

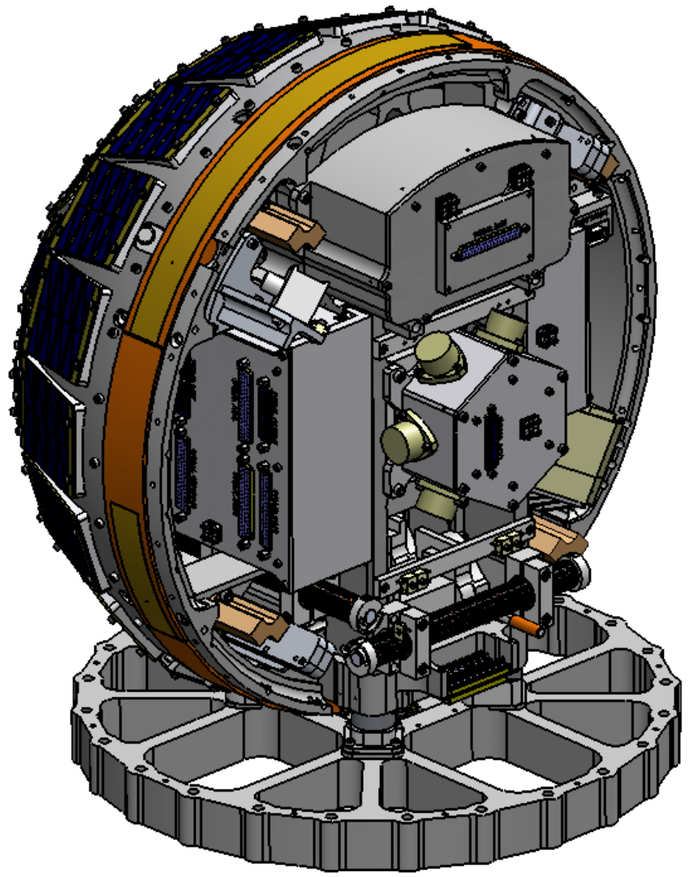

SPACE-SECTOR-LAB
(INTERFACE TO LAUNCH VEHICLE)

SIGNED 1/2/2009

UNLESS OTHERWISE SPECIFIED:
DIMENSIONS ARE IN **INCHES [MILLIMETERS]**

TOLERANCES:
LINEAR:
ANGULAR:

SURFACE FINISH:

	NAME	SIGNATURE	DATE	CONTACT
DRAWN	BRUCE DAVIS			
STR LEAD	ANDREW TOMCHEK			
I&T LEAD	BRUCE DAVIS			
SYS ENGR.	MIKE GRUSIN			
PRG MGR.	MARCIN PILINSKI			

WEIGHT: NA

UNIVERSITY OF COLORADO AT BOULDER
ASEN DEPT. & COSGC
BOULDER, CO 80309

DANDE

MASTER ASSEMBLY

DRAWING NO. SYS200

REV 3

SCALE: N/A

SHEET 1 OF 10

NOTES: DANDE EXPLODED VIEW

ASSEMBLY / PART CALLOUT TABLE

CALLOUT	PART NAME	PART NUMBER/SPEC	QTY	FASTENS BY QTY COLUM X
1	ACCELEROMETER ASSEMBLY	ACC200	1	4 X STR864-5
2	HORIZON CROSSING INDICATOR ASSEMBLY	ADC201	2	3 X STR863-5
3	MAGNETOMETER ASSEMBLY	ADC202	1	3 X STR864-5
4	X-TORQUE ROD ASSEMBLY	ADC204	1	4 X STR863-5
5	NUTATION DAMPER ASSEMBLY	ADC205	2	4 X STR864-5
6	Y-TORQUE ROD ASSEMBLY	ADC206	1	4 X STR863-5
7	COMMAND & DATA HANDLING BOX ASSEMBLY	CDH200	1	4 X STR864-5
8	COMMUNICATIONS BOX ASSEMBLY (TNC / AVR)	COM200	1	4 X STR864-5
9	TRANSMITTER BOX ASSEMBLY	COM201	1	4 X STR864-5
10	RECEIVER PATCH ANTENNA	COM202	1	N/A
11	TRANMIT PATCH ANTENNA	COM203	2	N/A
12	ANTENNA POWER AMPLIFIER	COM204	2	NOT YET KNOWN
13	RECEIVER BOX ASSEMBLY	COM205	1	4 X STR861-5
14	BATTERY BOX ASSEMBLY	EPS201	2	6 X STR864-5
15	ELECTRICAL POWER SYSTEM BOX ASSEMBLY	EPS202	1	4 X STR864-5
16	NEUTRAL MASS SPECTROMETER ASSEMBLY	NMS200	1	4 X STR864-5
17	LIGHTBAND ADAPTER BRACKET	SEP201	1	MECHANISM BOLTS (2)
18	PRIMARY STRUCTURE ASSEMBLY	STR200 (INCLUDES SEP202)	1	N/A
19	HEMISPHERE +X ASSEMBLY	STR201	1	28 X STR863-3
20	HEMISPHERE -X ASSEMBLY	STR202	1	28 X STR863-3
21	TOWEL BARS (FOR WIRING HARNESS)	STR208-1	3	2 X STR862-3
22	MASS TRIM SYSTEM	SYS201-1	8	2 X STR865-3

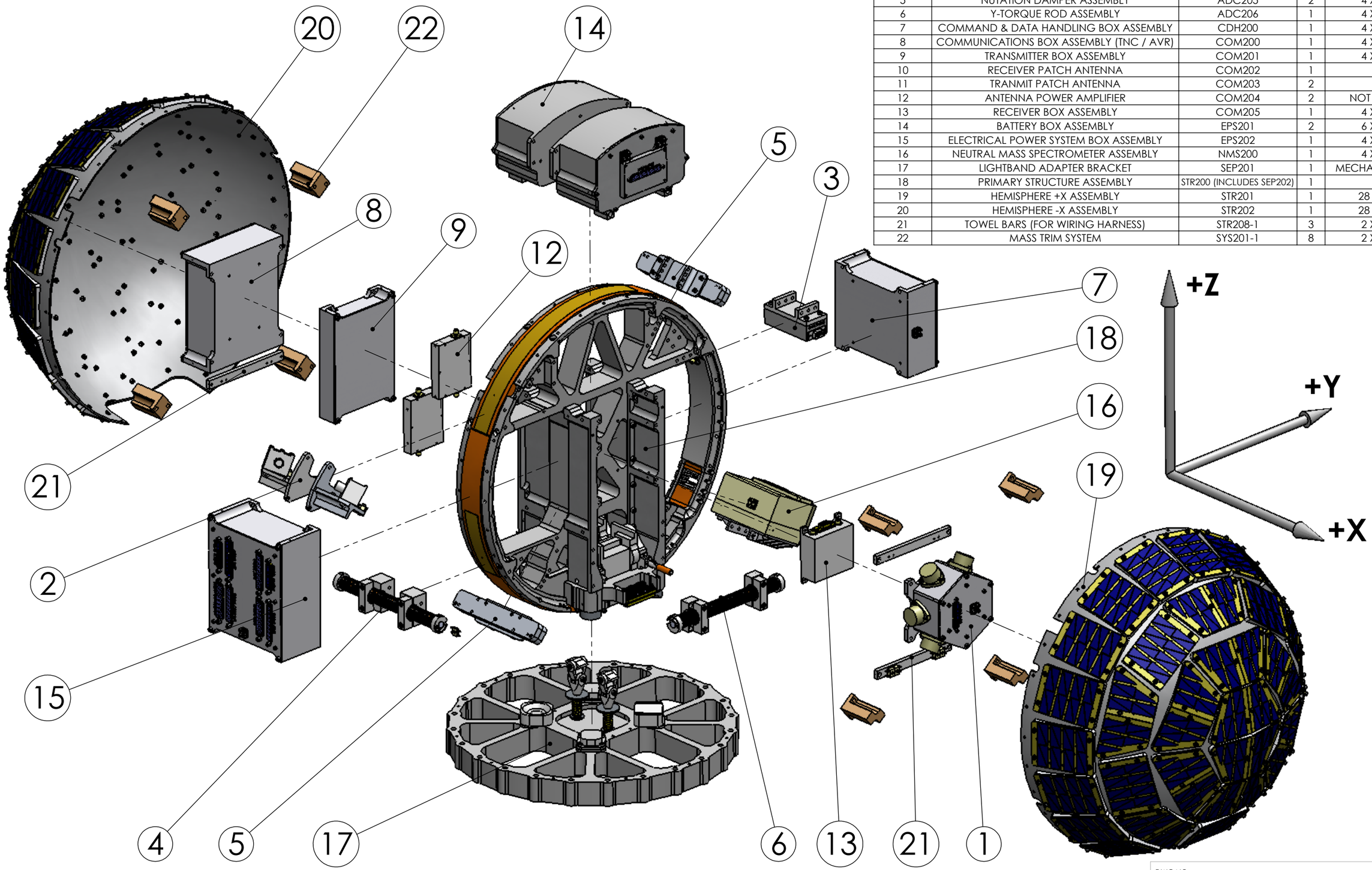

DWG NO.	REV
SYS200	3
SCALE: N/A	SHEET 2 OF 10

NOTES: DANDE PHYSICAL ENVELOPE

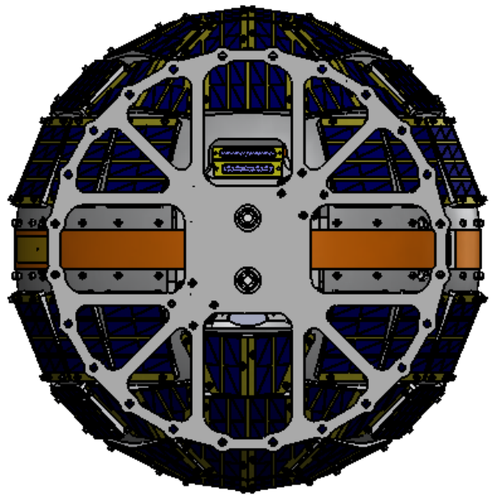

NOTES:
1. COORDINATE TRANSFORMATION:
X(NANOSAT) = X(DANDE)
Y(NANOSAT) = Y(DANDE)
Z(NANOSAT) = Z(DANDE) + 10.50 INCHES

2. DYNAMIC ENVELOPE IS < 0.2 INCHES RELATIVE TO STATIC ENVELOPE

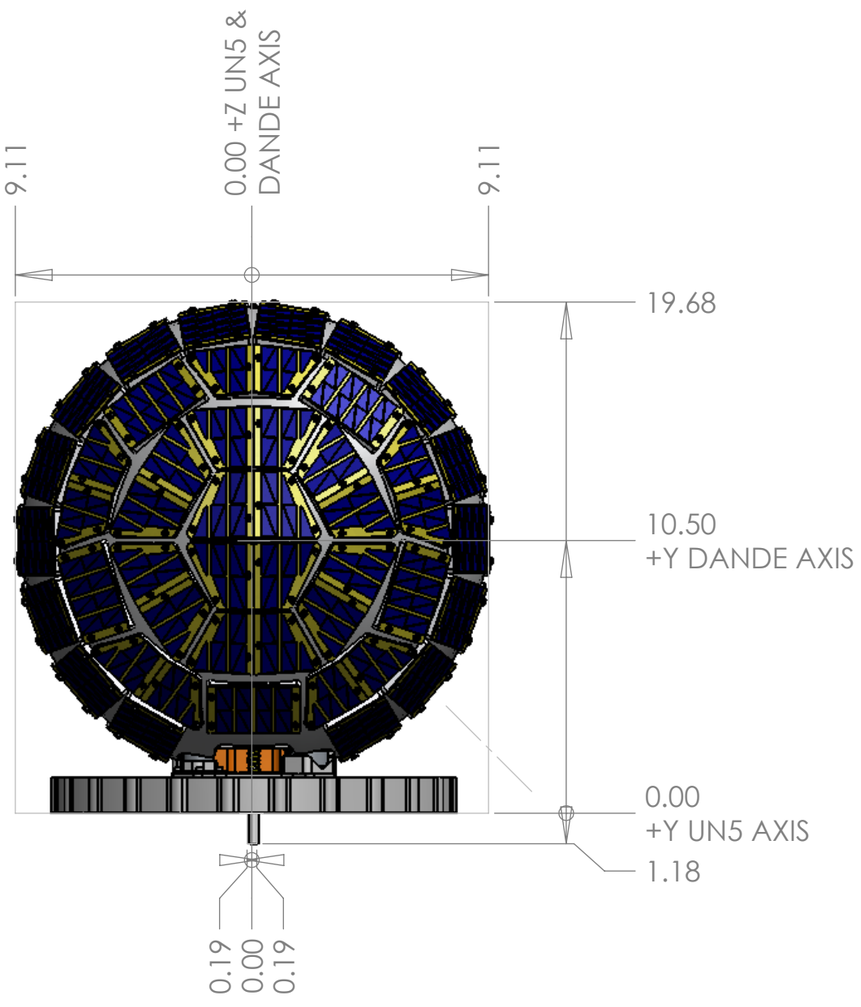

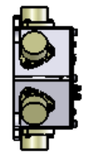

ACC BOX TOP

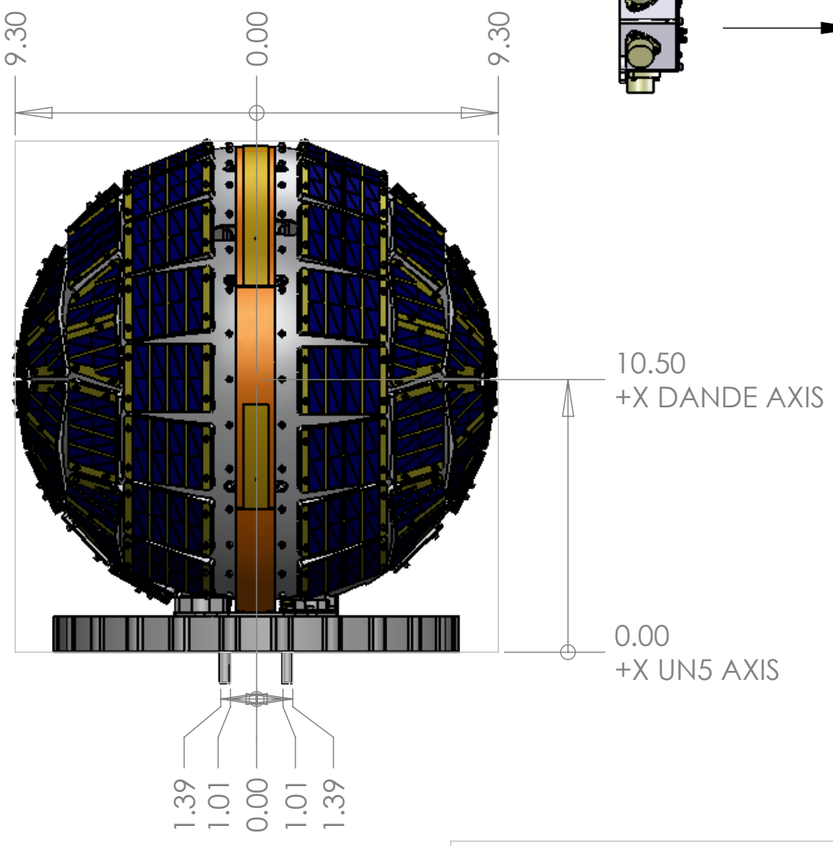

ACC BOX TOP

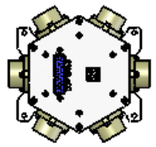

DWG NO.	REV
SYS200	3
SCALE: N/A	SHEET 3 OF 10

NOTES: EXTERNAL COMPONENT ALIGNMENT AND FIELD OF VIEW (FOV)

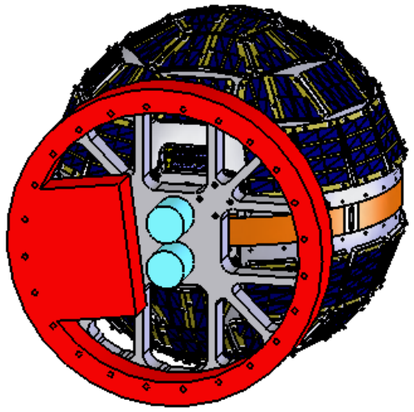

LIGHTBAND KEEP OUT ZONE (RED)

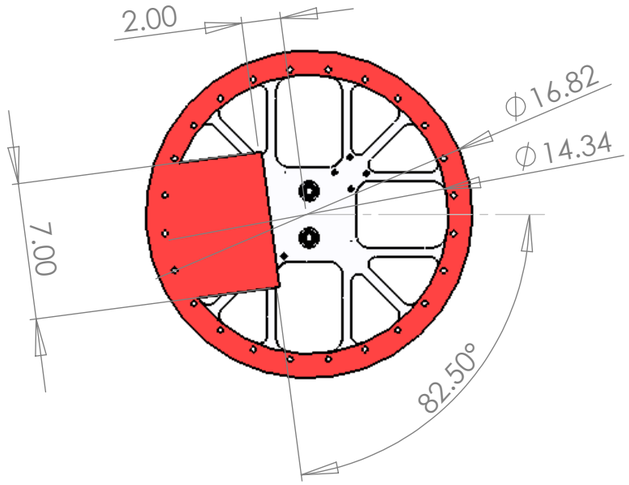

RELEASE BOLT VOLUME (LIGHT BLUE)

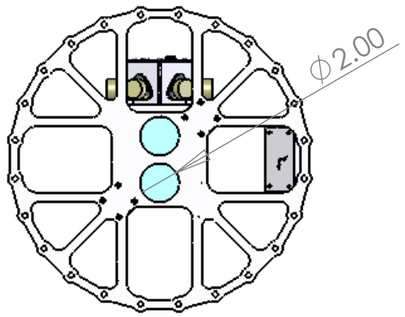

NMS ALIGNMENTS / FOV

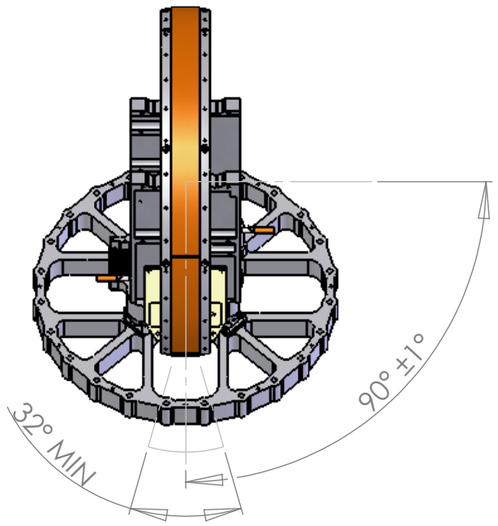

HCI FOV

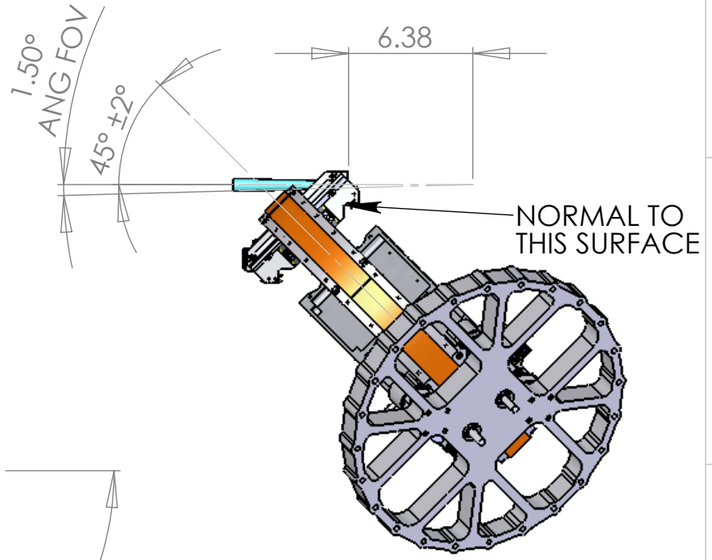

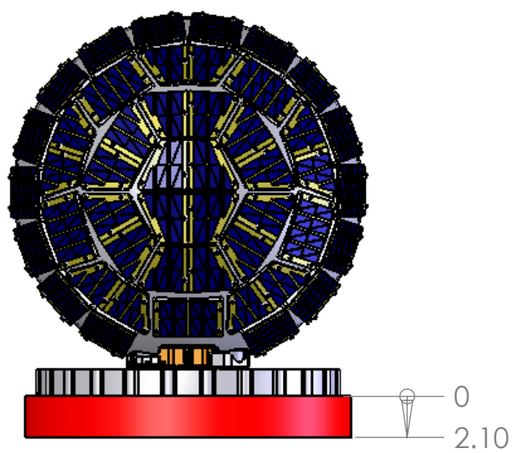

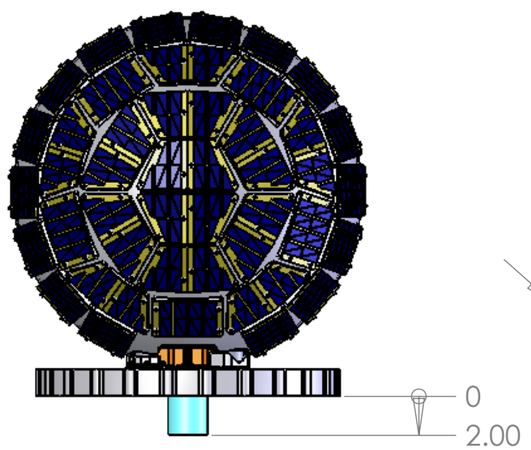

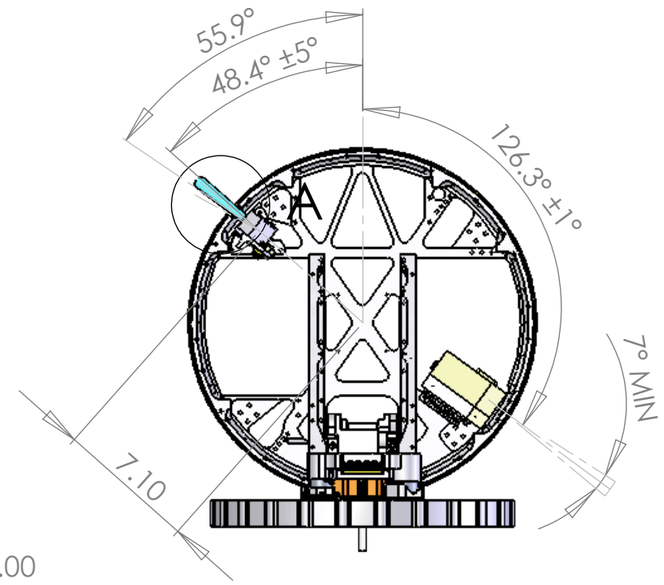

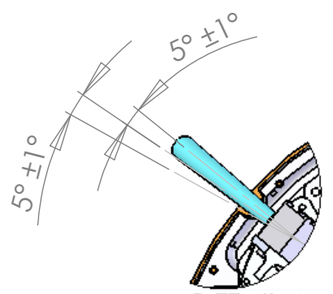

DETAIL A
SCALE 1 : 4

DWG NO.	REV
SYS200	3
SCALE: N/A	SHEET 4 OF 10

NOTES: INTERNAL COMPONENT ALIGNMENT AND FIELD OF VIEW (FOV)

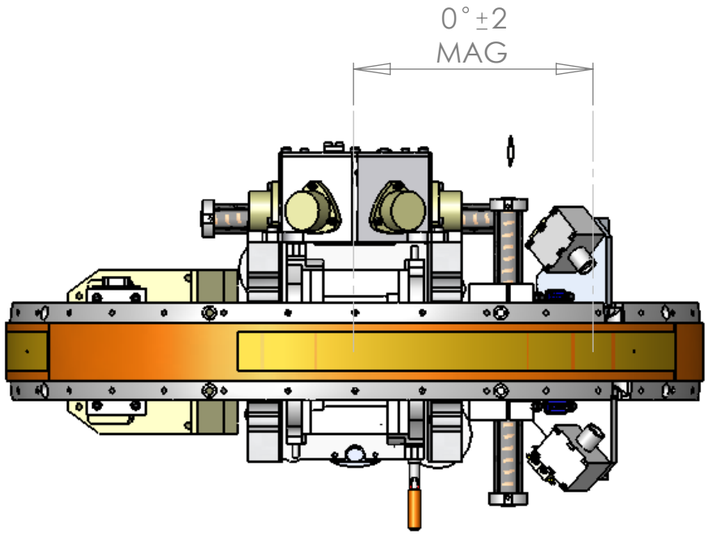

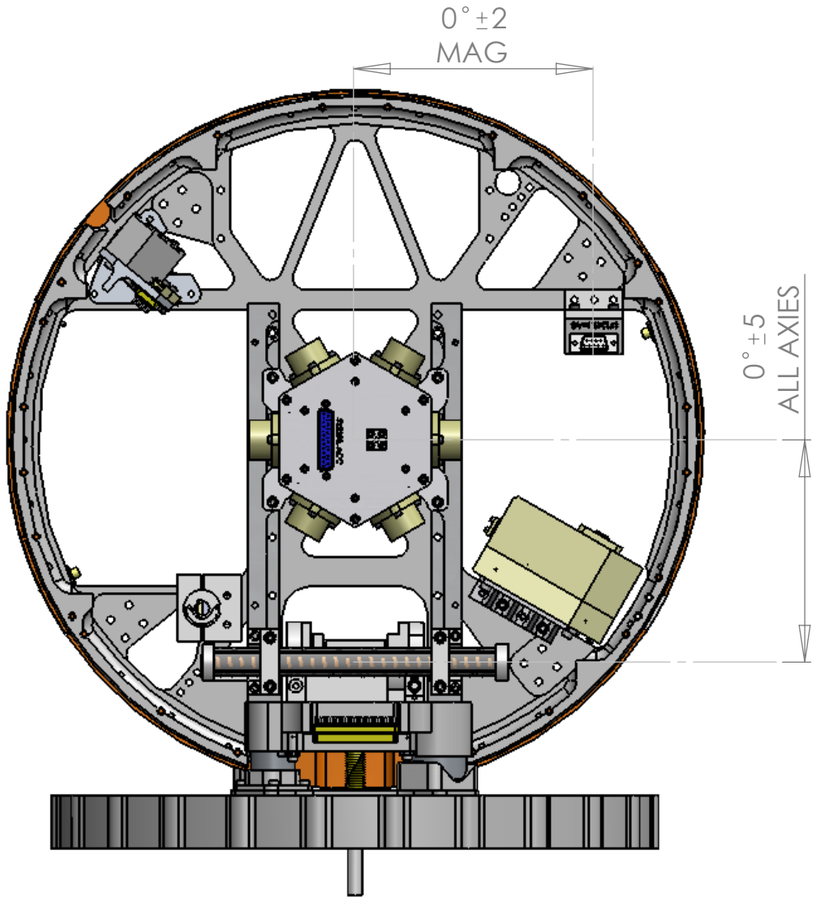

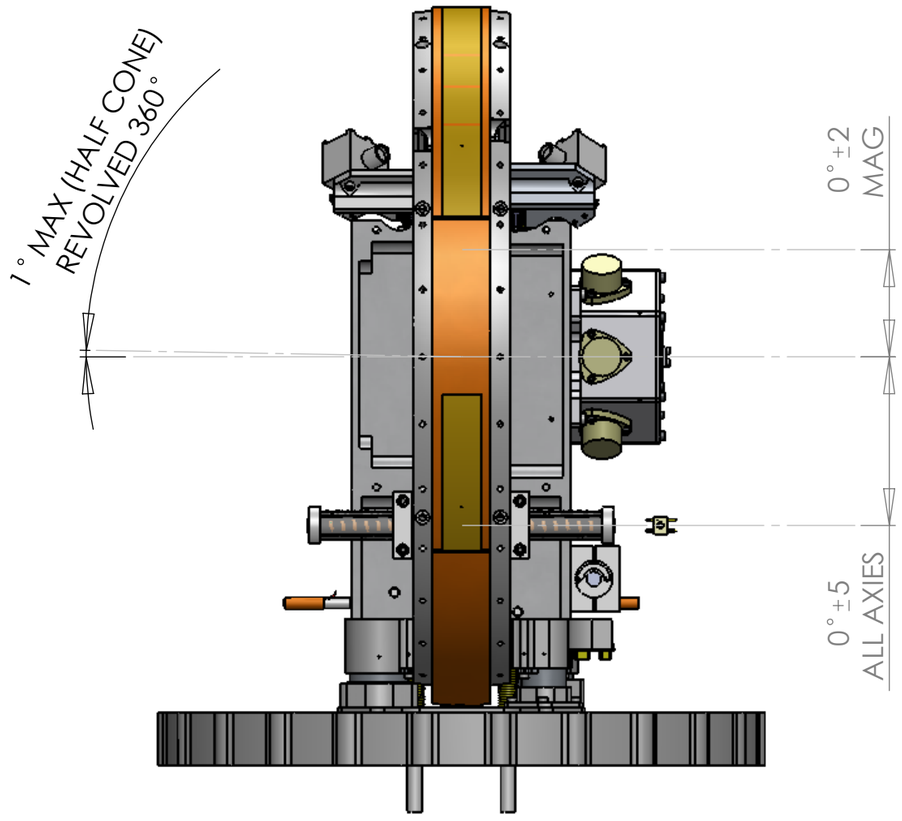

DWG NO.	REV
SYS200	3
SCALE: N/A	SHEET 5 OF 10

NOTES: SURFACE COATINGS, INTERNAL

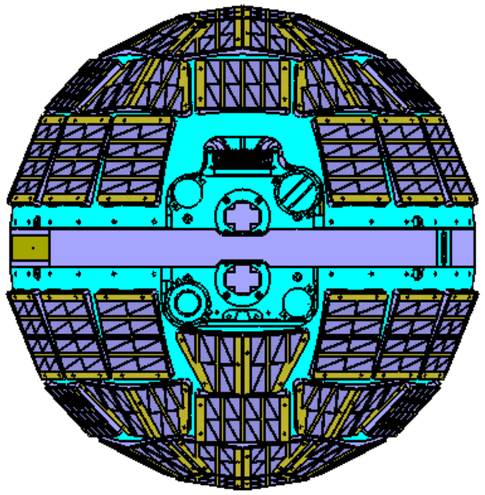

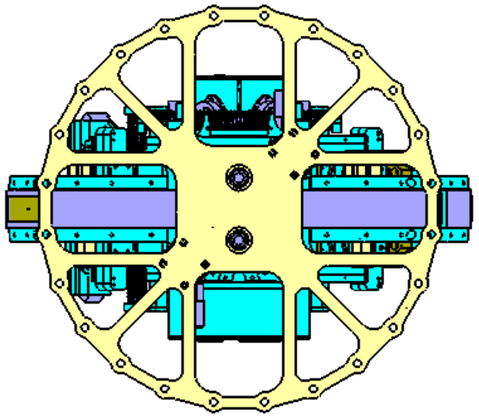

- ALODINE CONVERSION COAT, MIL-C-5541 CLASS 3 COLOR GOLD (IRIDITE)
- ANODIZE, MIL-A-8625 TYPE 2 CLASS BLACK
- NO COATING (OFF THE SHELF FINISH)
- GOLD PLATE, MIL-G-45204C TYPE 1, CLASS 1 (0.00005" THICK, 99.7% PURITY)

NOTES:
1. ALL STAINLESS STEEL FASTENERS CONTAIN PLAIN (NO) COATING
2. ALL ALUMINUM METAL INTERFACES ARE ALODINE CONVERSION COATING

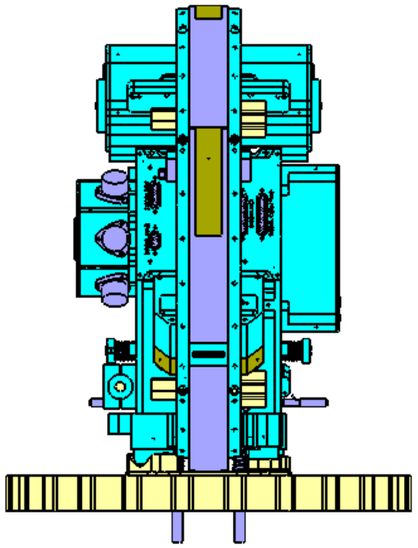

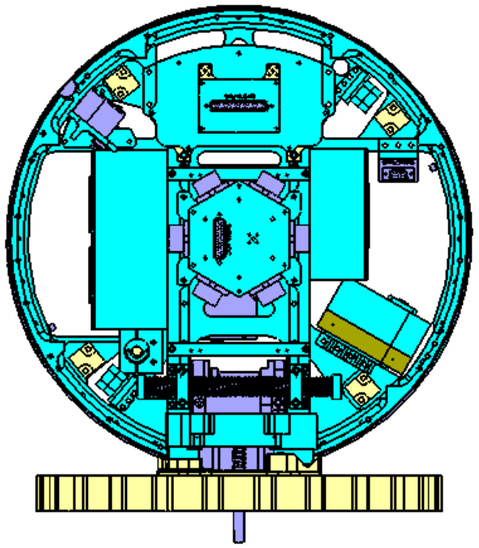

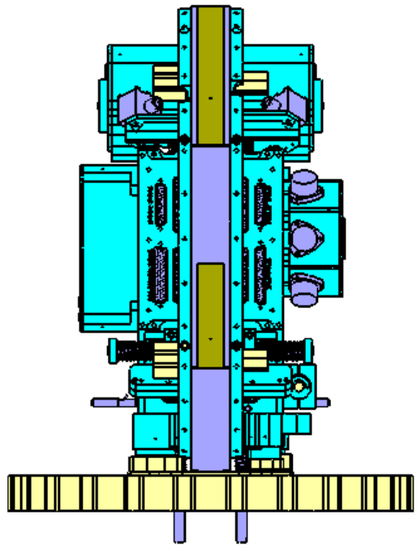

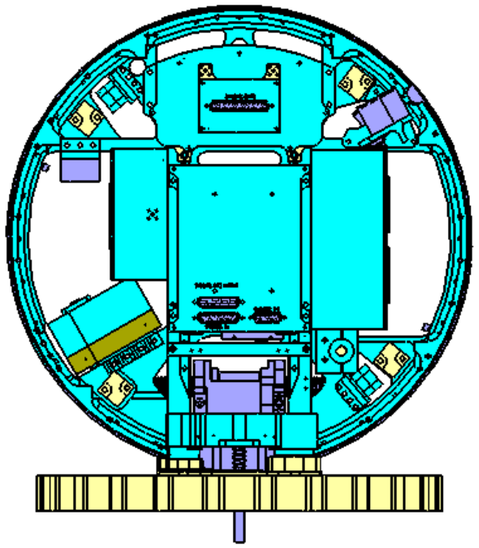

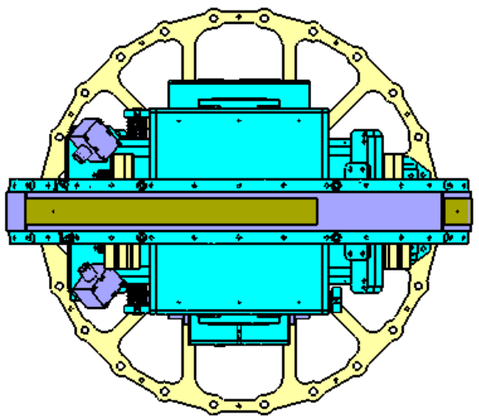

DWG NO.	REV
SYS200	3
SCALE: N/A	SHEET 6 OF 10

NOTES: SURFACE COATINGS HEMISPHERE ASSEMBLY

- ALODINE CONVERSION COAT, MIL-C-5541 CLASS 3 COLOR GOLD (IRIDITE)
- ANODIZE, MIL-A-8625 TYPE 2 CLASS BLACK
- NO COATING (OFF THE SHELF FINISH)
- GOLD PLATE, MIL-G-45204C TYPE 1, CLASS 1 (0.00005" THICK, 99.7% PURITY)

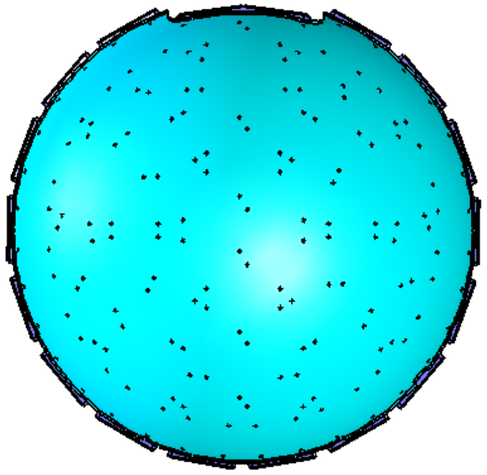

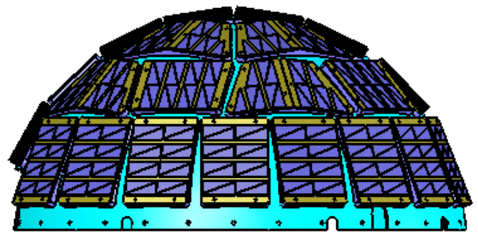

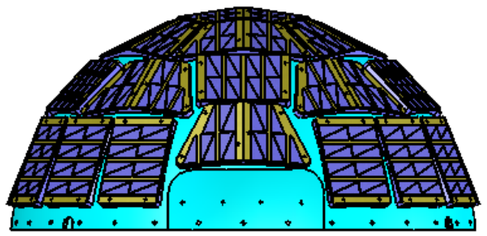

A

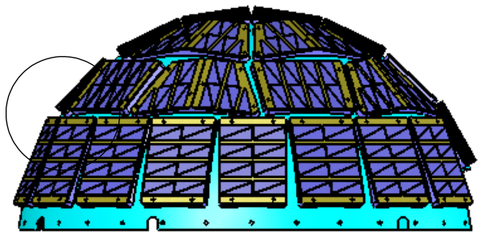

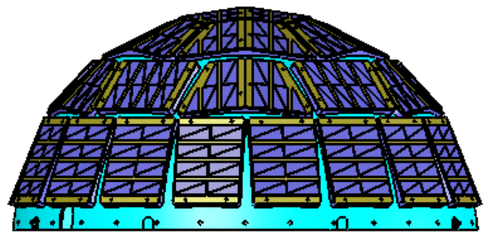

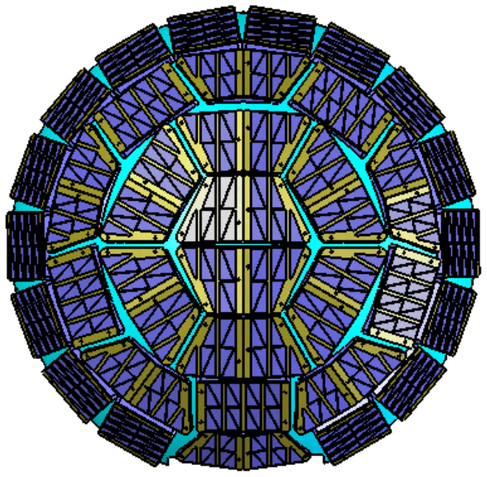

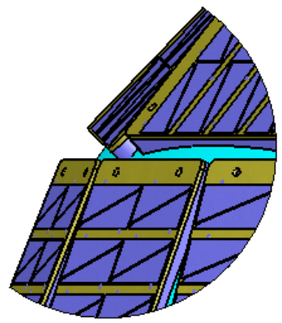

DETAIL A
SCALE 1 : 2

DWG NO.	REV
SYS200	3
SCALE: 1/1	SHEET 7 OF 10

NOTES: MGSE CAGE ENVELOPE

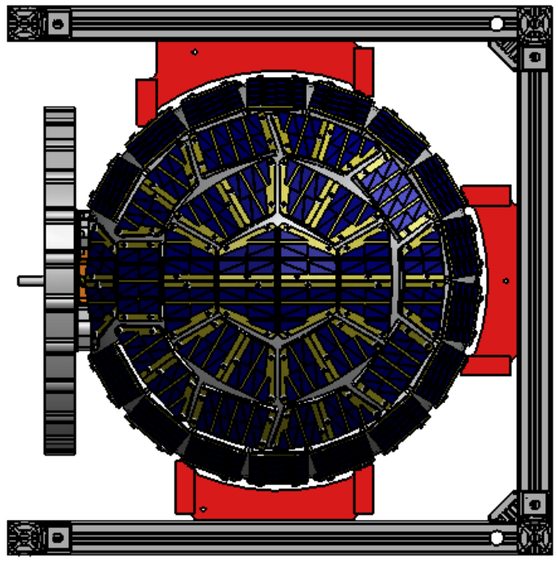

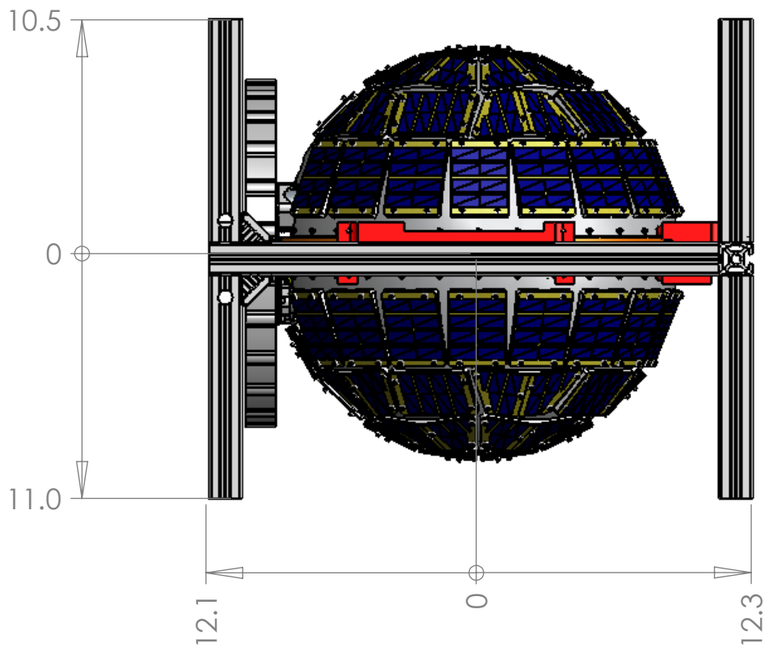

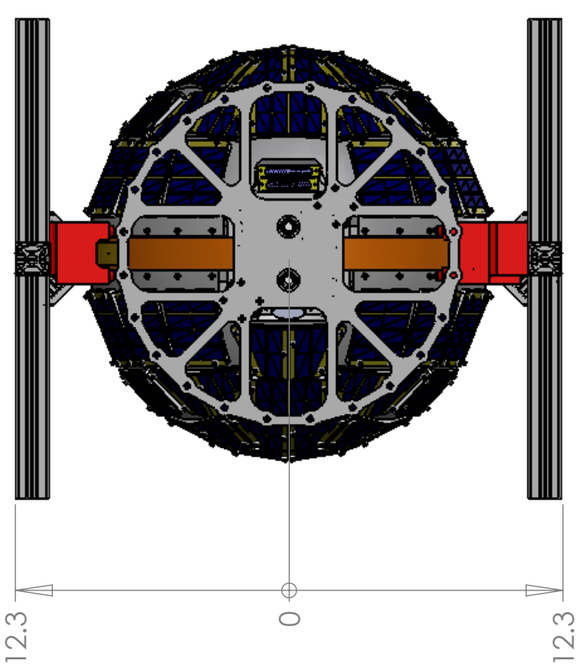

DWG NO.	REV
SYS200	3
SCALE: N/A	SHEET 8 OF 10

NOTES: CRANE LIFTING CONFIGURATIONS
THREE DIRECTIONS SHOWN IN FLIGHT CONFIGURATION

SINGLE-POINT
CRANE LIFT

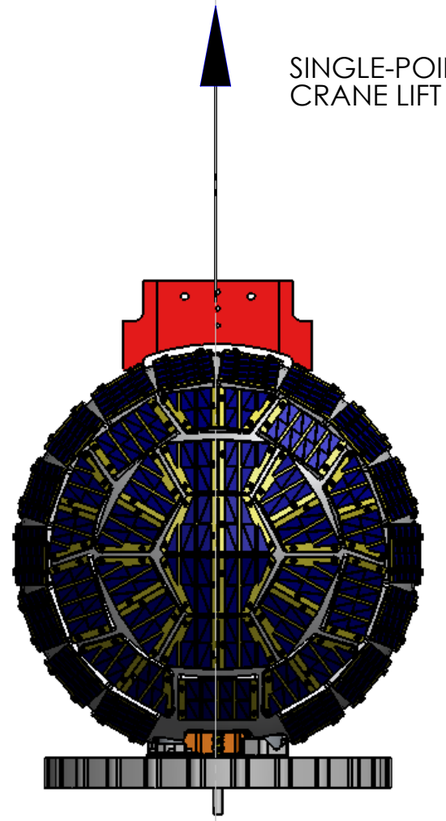

CENTER OF GRAVITY
(ALL CONFIGURATIONS)

SINGLE-POINT
CRANE LIFT

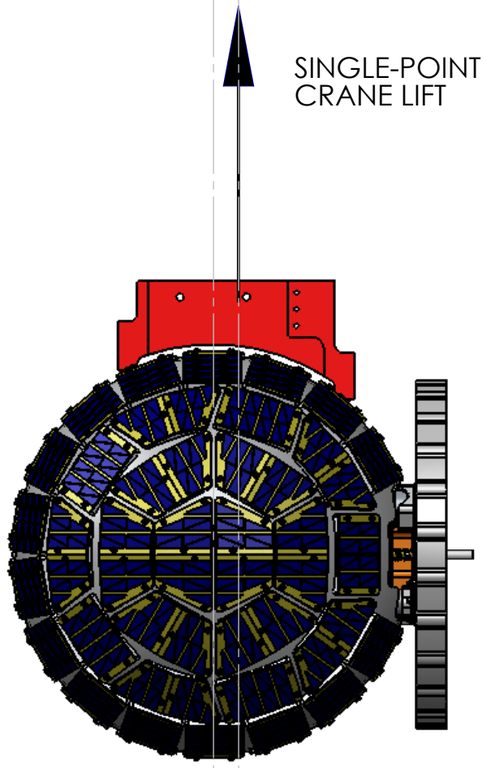

1.13

CENTER OF GRAVITY
(LIGHTBAND BRACKET ATTACHED)

THREE-POINT
CRANE LIFT
(WILL USE
T-BLOCK)

X2

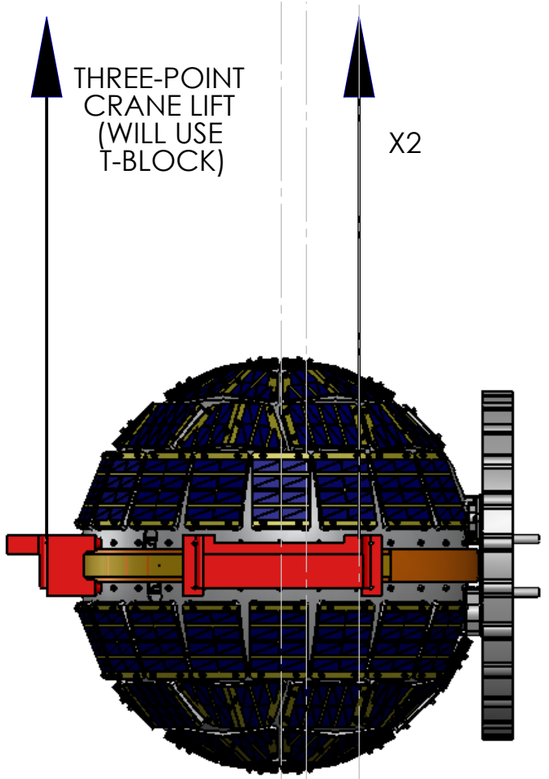

1.13
3.50

CENTER OF GRAVITY
(LIGHTBAND BRACKET ATTACHED)

DWG NO.	REV
SYS200	3
SCALE: N/A	SHEET 9 OF 10

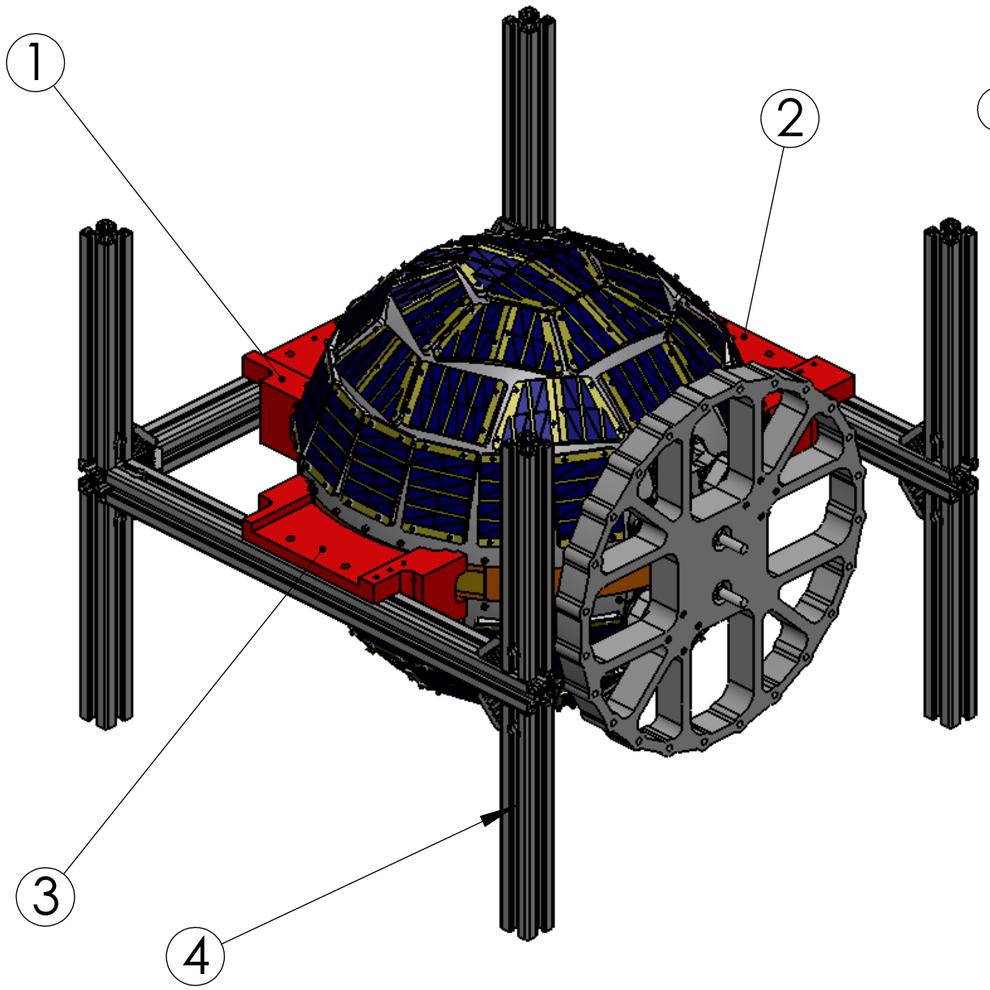

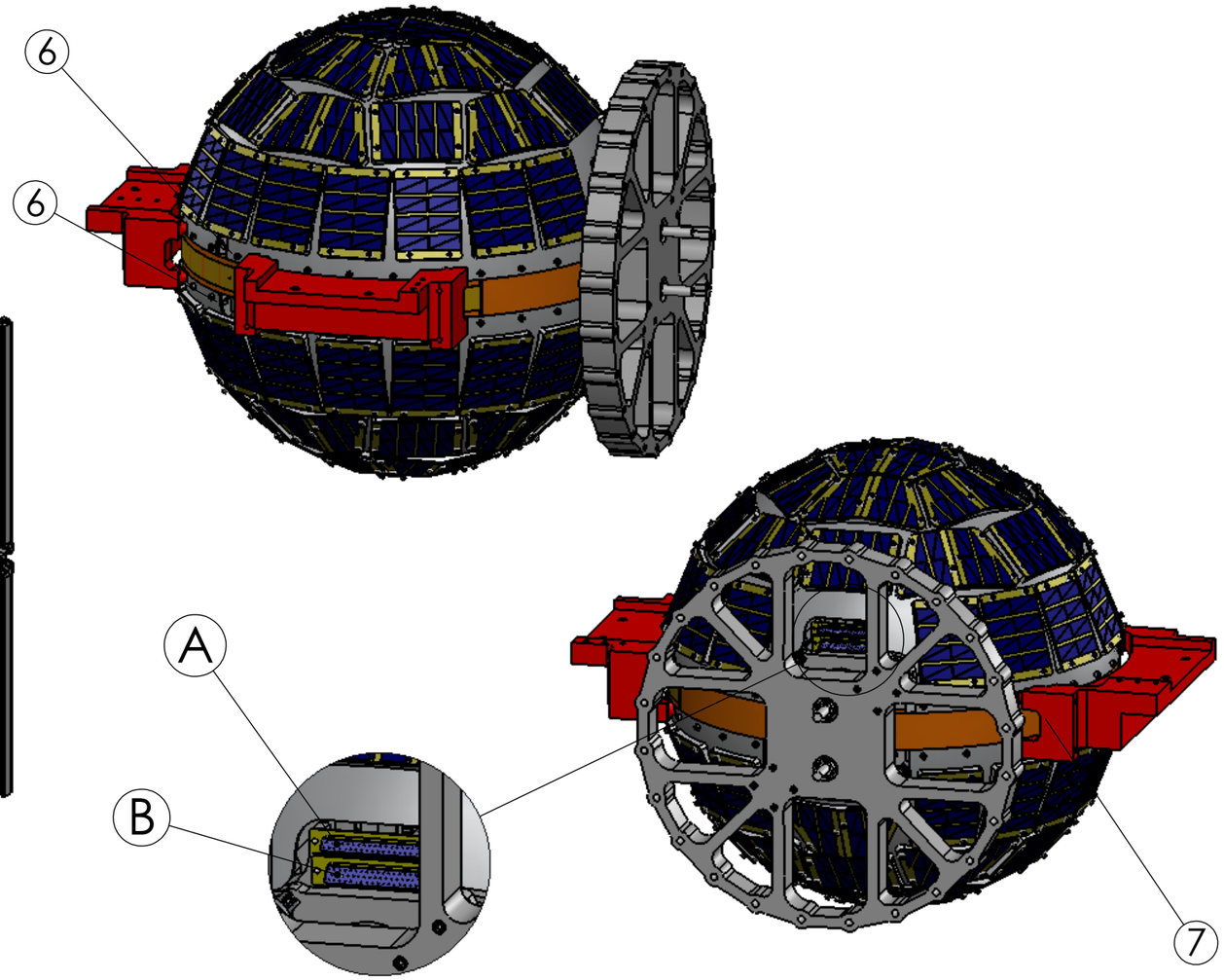

DETAIL
SCALE 1 : 3

CALLOUT OF RED TAG ITEMS				
CALLOUT	PART NAME	NOTES	PART NUMBER/SPEC	QTY
1	MGSE LIFT BRACKET +Z	COLORED RED	STR203-12	1
2	MGSE LIFT BRACKET +Y	COLORED RED	STR203-13	1
3	MGSE LIFT BRACKET -Y	COLORED RED	STR203-14	1
4	MGSE CAGE ASSEMBLY		STR204	1
5	NMS CONTAMINATION COVER (NOT SHOWN)	COLORED RED	TBD	1
6	HCI CONTAMINAITON COVER (NOT SHOWN)	COLORED RED	TBD	1

CALLOUT OF GREEN TAG ITEMS				
CALLOUT	PART NAME	NOTES	PART NUMBER/SPEC	QTY
A	37-PIN CONNECTOR CAP (NOT SHOWN)	TETHERED TO S/C ATTACHES WITH 2 X 4-40 CAPTIVE FASTENERS	SYS248-2H_CAP	1
B	50-PIN CONNECTOR CAP (NOT SHOWN)	TETHERED TO S/C ATTACHES WITH 2 X 4-40 CAPTIVE FASTENERS	SYS247-2H_CAP	1

DWG NO. SYS200 REV 3

SCALE: N/A SHEET 10 OF 10